MR. KEN

HVLS Fan

High Volume Low Speed Ceiling Fan

@mrkenthailand

mr.ken_thailand

mrkenthailand

@mrkenthailand

The Cosmo HVLS DC PMSM Motor is an intelligent fan designed to generate the coolest and most comfortable breeze.

With the intelligent technology of the DC PMSM (Permanent Magnet Synchronous Motor) and the use of high-power magnetic materials, it significantly improves energy efficiency compared to previous models that used gear systems. This results in energy savings. Therefore, the Cosmo PMSM DC Motor offers numerous benefits such as quiet operation, reduced noise during fan operation, lightweight design, low maintenance requirements, and a longer operational lifespan.

Energy Saving

Compared with traditional high-speed small fans, HVLS fans consume less energy at the same air movement, because they operate at low speed, reducing air resistance and mechanical losses.

Improve Air Quality

HVLS fans can move a large amount of air, improve indoor air circulation, reduce harmful gases and bacteria, and improve air quality, which is beneficial to human health.

Improve comfort

HVLS fans can create a comfortable airflow environment indoors, making people feel cooler and more comfortable, which can minimize the impact of indoor temperature on people, and also reduce the dryness of indoor air.

Reduce Noise

Due to the low-speed rotation of HVLS fans, the noise is lower than that of high-speed small fans, which is conducive to creating a more peaceful working and living environment.

The main concept in designing the Cosmo HVLS DC PMSM fan to achieve maximum efficiency is to reduce heat and save energy compared to traditional fans. Traditional fans consume more energy and release carbon dioxide gases into the atmosphere, leading to increased air pollution. As a result, the Cosmo HVLS DC PMSM fan has been designed to operate efficiently for extended periods, providing sustainable energy savings.

1. The main casing of the host is made of aluminum alloy material, which has high strength and makes the host more lightweight.
2. The bearings are made by TPI brand from Taiwan, with a dynamic rated load of 2570N and a static rated load of 1530N. They have been tested for over 30,000 hours under comprehensive conditions, ensuring quality and reliability.
3. The stator is made by integrated injection molding of engineering plastics and silicon steel sheets, which provides better precision and stability. The fan blades are made of aviation magnesium aluminum alloy material and have a streamlined shape developed using software for aircraft engine fan blades. They are treated with anodizing on the surface, which provides long service life, oxidation resistance, higher tensile and yield strength, and better resistance to fracture toughness.

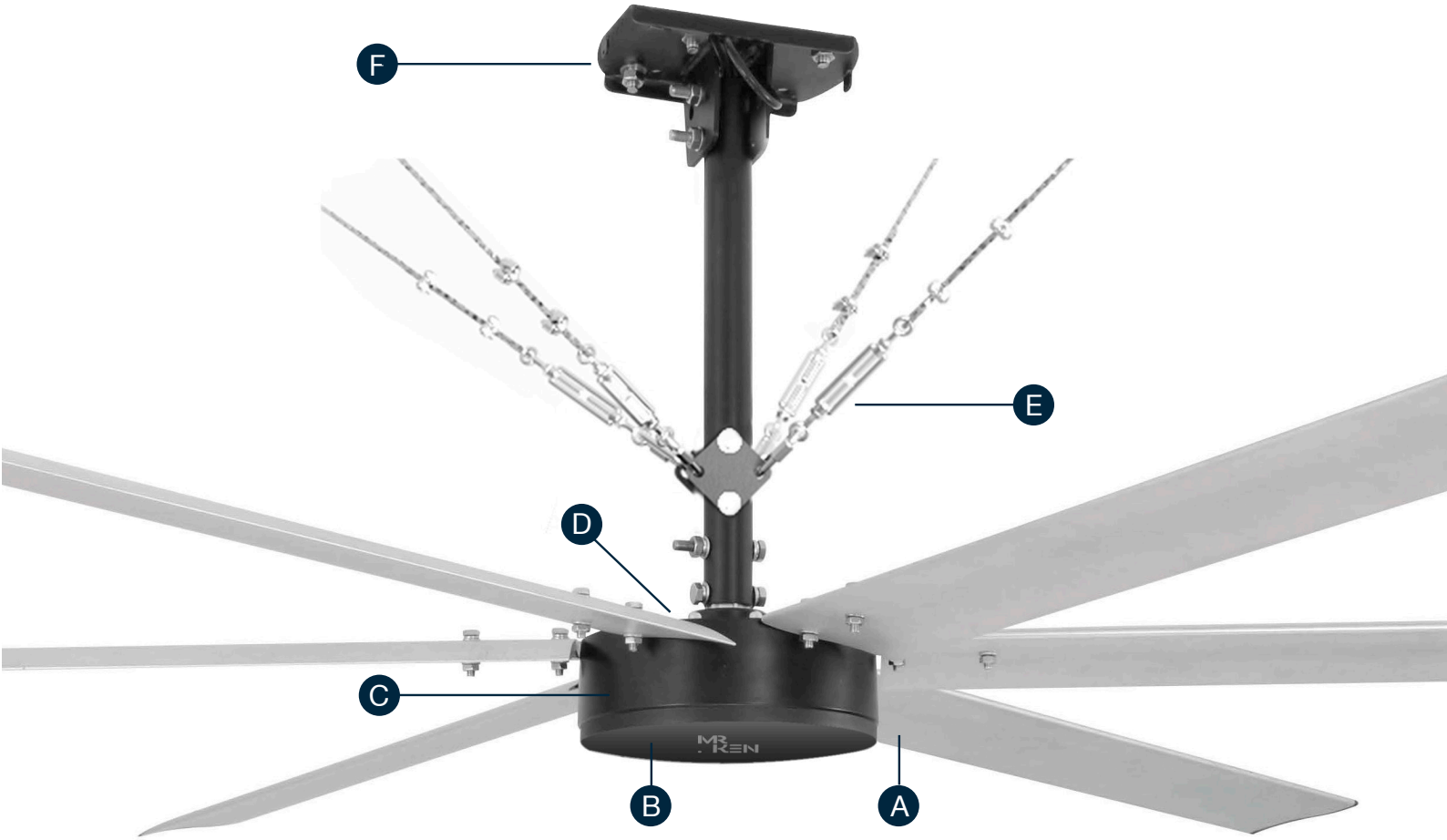

A

Aerospace Wing Simulation Design, Compliant with Aerodynamic Principles. Low Resistance, High Airflow, and High Efficiency. The Single Blade weighs only 1.7kg, which reduces motor load, extends lifespan, ensures safety, and enhances energy efficiency. It adopts a 6-blade design, resulting in greater airflow and a smoother breeze.

B

Maintenance-free lifetime pure copper direct current variable pre-magnetization synchronous motor with small moment of inertia, large starting torque, low current, and fast response speed.

C

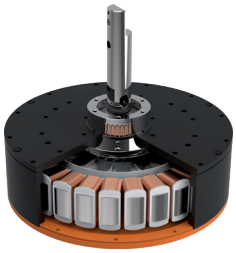

The screw holes connecting the fan blades and the motor are designed with a closed bottom to prevent therisk of iron filings falling into the main unit during customer installation of thefan blades. Ultra-thin, large-diameter direct-drive permanent magnet main engine: the motor has no reduction gear and no gear design, reducing mechanical wear and reducing failure rate.

D

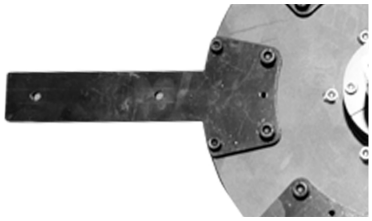

The fork and motor shaft are made of 45# steel, and the fork undergoes 30,000 fatigue tests with a vertical deformation of less than 0.2 degrees, with good steel and toughness.

E

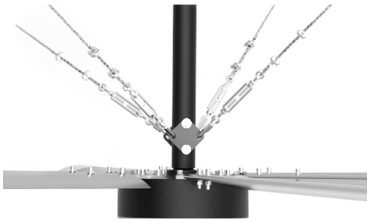

The entire machine has 5 safety ropes, the main safety rope is connected to the motor shaft, and has a tensile strength of 1.8 tons, the safety cross pin has a tensile strength of 1.5 tons, of which 4 are parallel safety ropes with a tensile strength of 0.43 tons.

F

The multi-functional hanger is suitable for various installation scenarios and easy to install. It can be safely and quickly installed on structures such as concrete, I-beams, round steel, square steel, and more. The hanger is made of fully welded Q235 steel. It can swing at an angle of ±15 degrees perpendicular to the hoisting pipe. The hanger can bear a weight of over 2.0 tons.

Cosmo

2.5M 3.0M

Matte Black - Aluminum

Cosmo 2.5M #38800
Cosmo 3.0M #48800

Body : Aluminum Alloy
Blade : Aluminum Alloy Blades
Motor : DC Motor
Control : Wall Control Box

Control Box

Cosmo

3.6M 4.3M

Matte Black - Matte Black

Cosmo 3.6M #78800
Cosmo 4.3M #88800

Body : Aluminum Alloy
Blade : Aluminum Alloy Blades
Motor : DC Motor
Control : Wall Control Box

Control Box

Cosmo 2.5M - 3.0M
Hanger Bracket For Circular Steel & Square Steel

No.	Type	Description/mm	Qty
1	Lock Nuts	M12	4
2	Lock Washers	φ12.5*3	4
3	Tablet	175*140*45	1
4	Hanger Bracket	227*138*94	1
5	Washers	30*30*3	4
6	Bolts	M12*180	4

*Standard Hanger Bracket

Front View

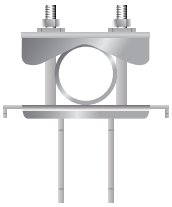

Front View

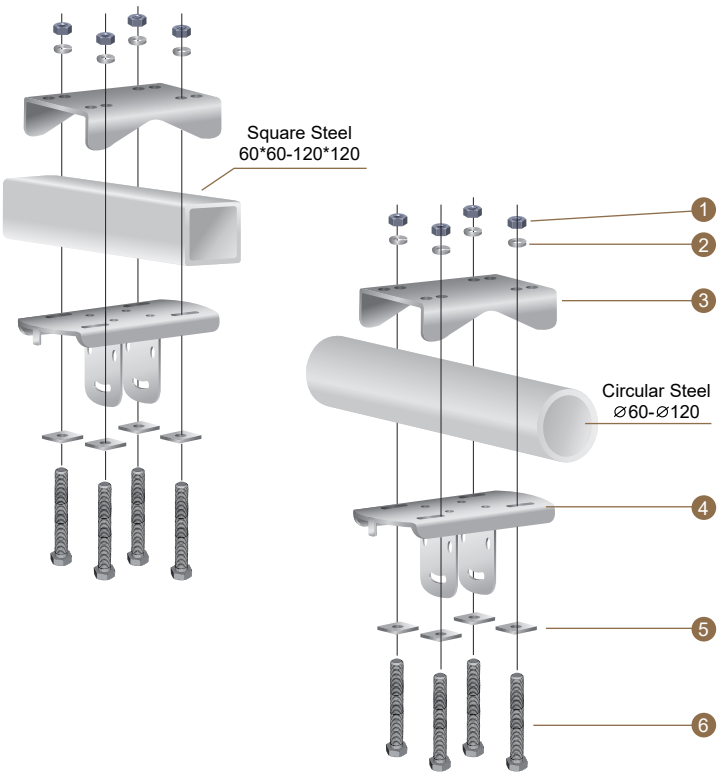

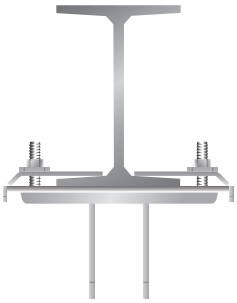

Front View

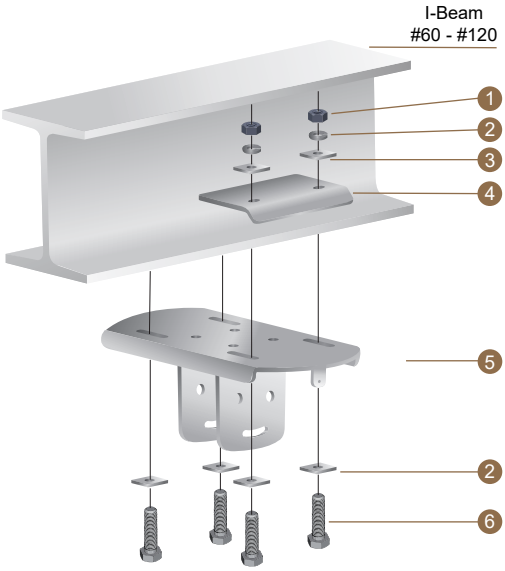

Cosmo 2.5M - 3.0M
Hanger Bracket For I-Beam

No.	Type	Description/mm	Qty
1	Lock Nuts	M12	4
2	Lock Washers	φ12.5*3	4
3	Washers	30*30*3	8
4	Tablet	140*102*17	2
5	Hanger Bracket	227*138*94	1
6	Bolts	M12*60	4

Cosmo 3.6M - 4.3M
Hanger Bracket For Circular Steel & Square Steel

No.	Type	Description/mm	Qty
1	Lock Nuts	M12	4
2	Lock Washers	φ12.5*3	4
3	Shims	130*36*5	2
4	Tablet	175*140*45	1
5	Hanger Bracket	410*160*135	1
6	Bolts	M12*60	4

*Standard Hanger Bracket

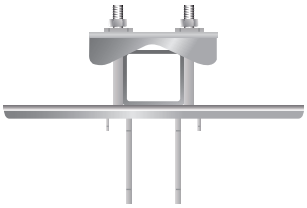

Front View

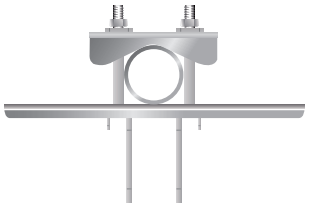

Front View

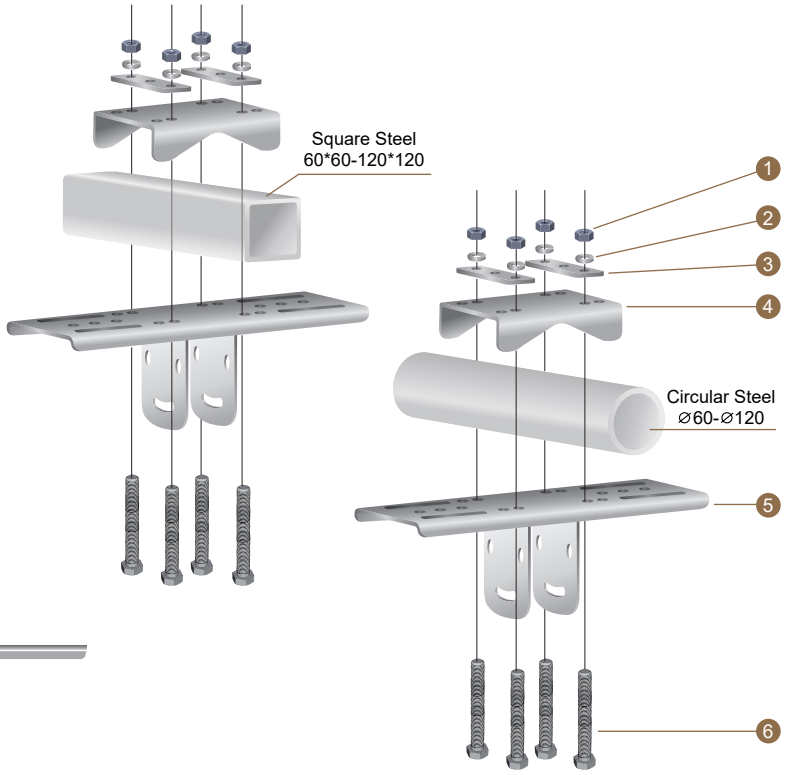

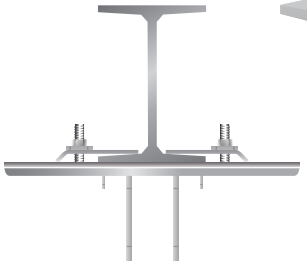

Front View

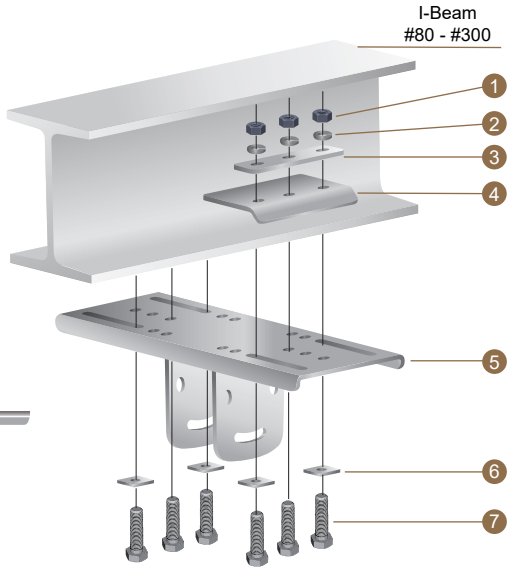

Cosmo 3.6M - 4.3M
Hanger Bracket For I-Beam

No.	Type	Description/mm	Qty
1	Lock Nuts	M12	6
2	Lock Washers	φ12.5*3	6
3	Shims	130*36*5	2
4	Tablet	140*160*135	2
5	Hanger Bracket	410*160*135	1
6	Washers	30*30*3	4
7	Bolts	M12*60	6

Model : Cosmo 2.5M HVLS DC Motor

Coverage Area 200 sqm

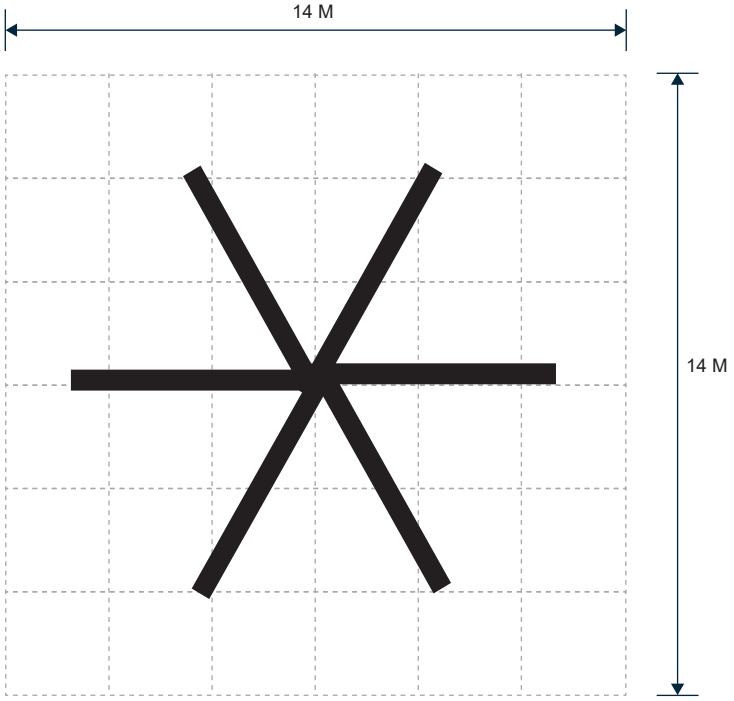

Fan Size 2.5 M

Installation Height from Floor to Ceiling Fan Blade

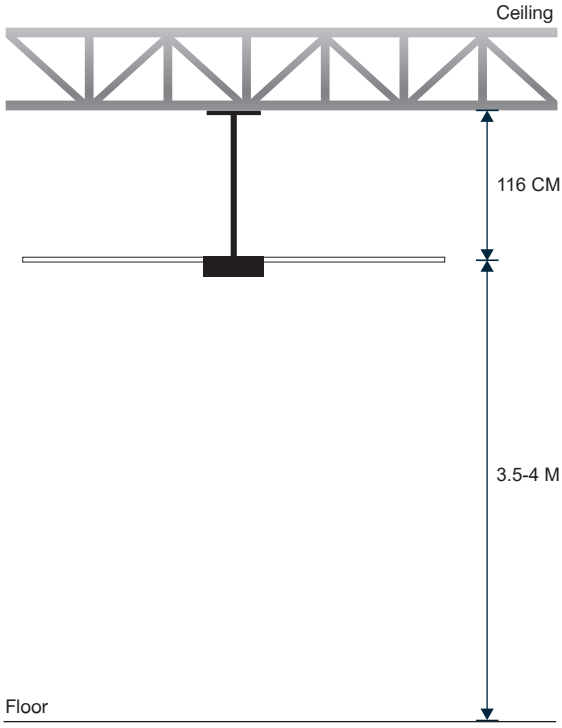

Air Circulation 2.5 M

Zone	Wide	Avg.Velocity
A	5 M	3.2 m/s
B	9 M	2.5 m/s
C	14 M	1.4 m/s

A B C

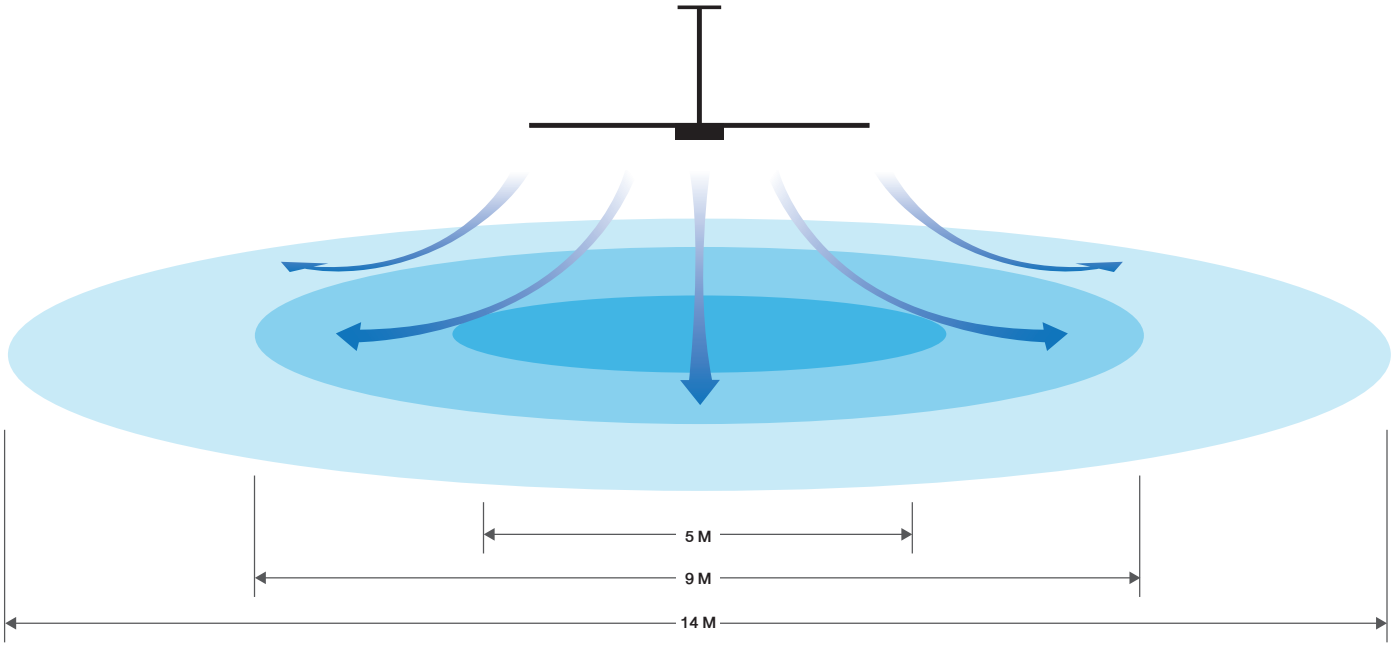

Model : Cosmo 2.5M HVLS DC Motor

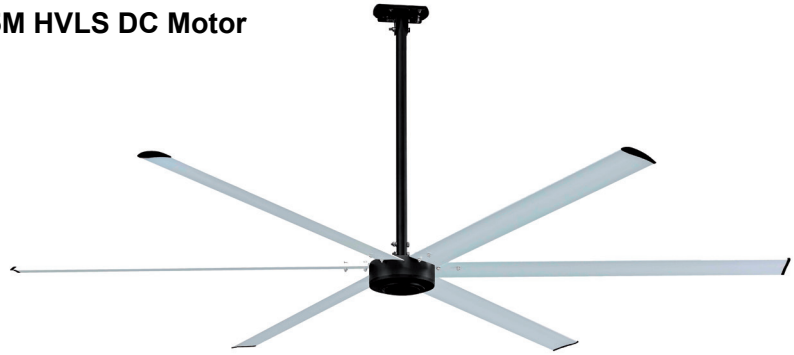

Control Box

Specification

1. Product Warranty :

2. Features :

Model	Motor Type	Body Material	Blades	Blades Material	Diameter	Control Mode	Net Weight Fan (kg)
Cosmo 2.5 M	DC PMSM Motor	Aluminum Alloy	6	Aluminum Alloy	2.5 M	Control box	23.5

3. Fan Dimension :

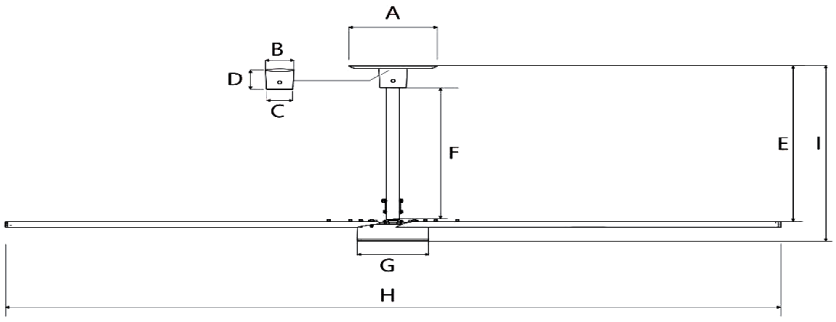

Unit : CM								
A	B	C	D	E	F	G	H	I
22.7	/	/	/	105	100	25.5	250	116

4. Power Consumption & Efficiency : (AC220V-50Hz)

Speed	Current (A)	Wattage (W)	Speed (RPM)	Air Flow (m^3/min)	Efficiency (m^3/min/W)	m/s	Effective Cover Area
1	0.06	10	30	450	32.14	0.30	200 M^2
2	0.07	12	33	750	50.00	0.50	
3	0.10	18	43	1050	45.65	0.70	
4	0.15	23	52	1350	42.19	0.90	
5	0.20	32	68	1950	45.35	1.30	
6	0.28	45	80	2250	36.29	1.50	
7	0.39	60	92	2550	29.65	1.70	
8	0.55	79	104	3150	26.25	2.10	
9	0.66	105	112	3750	25.86	2.50	
10	0.68	147	130	4200	28.00	2.80	

5.Weight/Size (Carton Box) :

Motor

Gross Weight (kg)	Net Weight (kg)	Size LxWxH (cm)	CU.FT	CU.M
20	16	52 x 31 x 27.5	1.57	0.044

Blade

Gross Weight (kg)	Net Weight (kg)	Size LxWxH (cm)	CU.FT	CU.M
8.5	7	117 x 16.5 x 19	1.30	0.037

Pipe box

Gross Weight (kg)	Net Weight (kg)	Size LxWxH (cm)	CU.FT	CU.M
2	1.5	101 x 4.5 x 4.5	0.07	0.002

Control Box 2 Years Warranty

Motor 10 Years Warranty

Model : Cosmo 3.0M HVLS DC Motor

Coverage Area 225 sqm

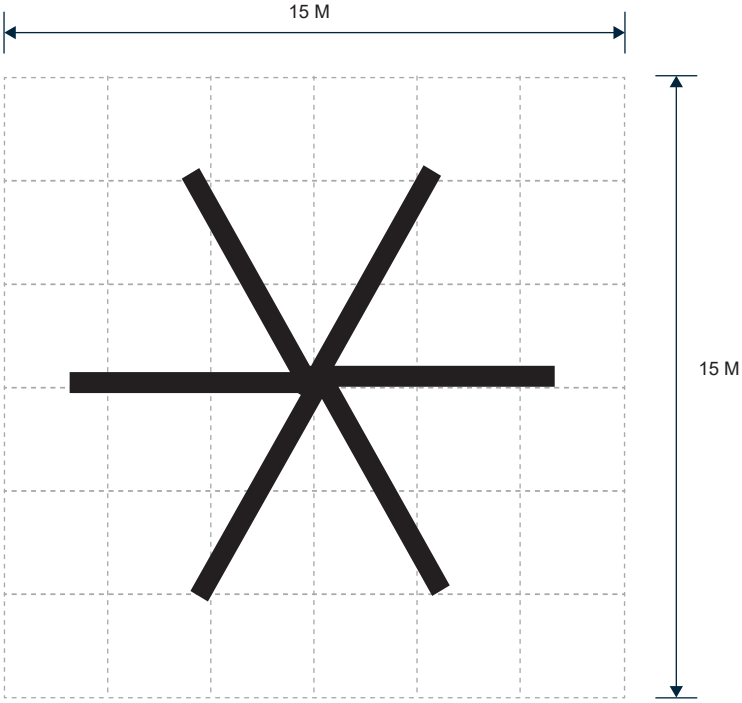

Fan Size 3.0 M

Installation Height from Floor to Ceiling Fan Blade

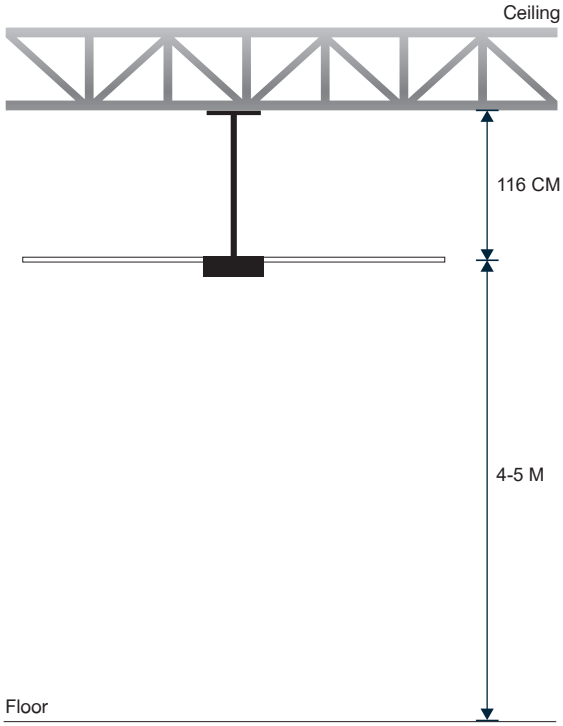

Air Circulation 3 M

Zone	Wide	Avg.Velocity
A	5 M	3.1 m/s
B	10 M	1.9 m/s
C	15 M	1.1 m/s

A B C

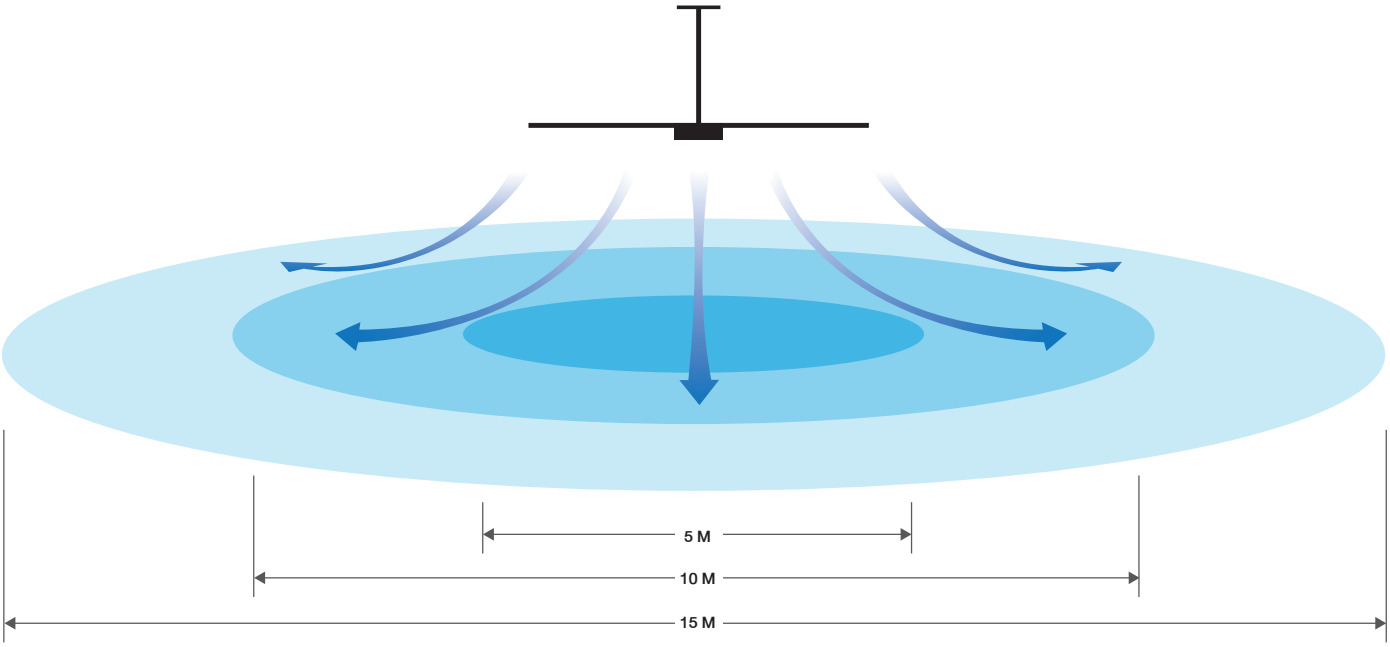

Model : Cosmo 3.0M HVLS DC Motor

Control Box

Specification

1. Product Warranty :

2. Features :

Model	Motor Type	Body Material	Blades	Blades Material	Diameter	Control Mode	Net Weight Fan (kg)
Cosmo 3 M	DC PMSM Motor	Aluminum Alloy	6	Aluminum Alloy	3 M	Control box	25

3. Fan Dimension :

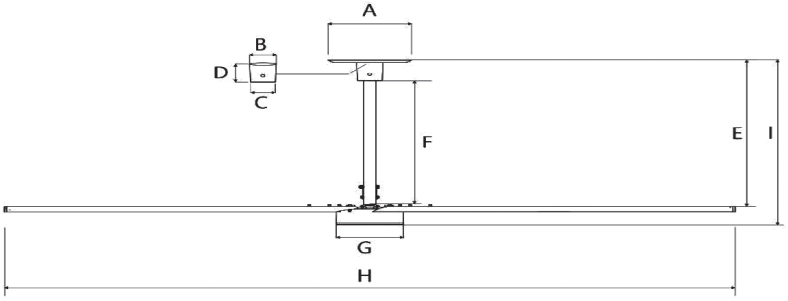

Unit : CM								
A	B	C	D	E	F	G	H	I
22.7	/	/	/	105	100	25.5	300	116

4. Power Consumption & Efficiency : (AC220V-50Hz)

Speed	Current (A)	Wattage (W)	Speed (RPM)	Air Flow (m^3/min)	Efficiency (m^3/min/W)	m/s	Effective Cover Area
1	0.05	12	20	550	45.8	0.3	225 M^2
2	0.08	18	30	928	51.6	0.5	
3	0.10	22	38	1140	51.82	0.6	
4	0.12	27	47	1650	61.11	0.9	
5	0.16	35	56	2310	66.00	1.3	
6	0.22	48	65	2740	57.08	1.5	
7	0.30	65	75	2980	45.08	1.6	
8	0.41	90	84	3710	41.22	2.0	
9	0.53	117	93	4271	36.50	2.3	
10	0.73	160	100	5200	32.50	2.8	

5.Weight/Size (Carton Box) :

Motor

Gross Weight (kg)	Net Weight (kg)	Size LxWxH (cm)	CU.FT	CU.M
20	16	52 x 31 x 27.5	1.57	0.044

Blade

Gross Weight (kg)	Net Weight (kg)	Size LxWxH (cm)	CU.FT	CU.M
10	8.5	142 x 16.5 x 19	1.57	0.044

Pipe box

Gross Weight (kg)	Net Weight (kg)	Size LxWxH (cm)	CU.FT	CU.M
2	1.5	101 x 4.5 x 4.5	0.07	0.002

Control Box 2 Years Warranty

Motor 10 Years Warranty

Model : Cosmo 3.6M HVLS DC Motor

Coverage Area 300 sqm

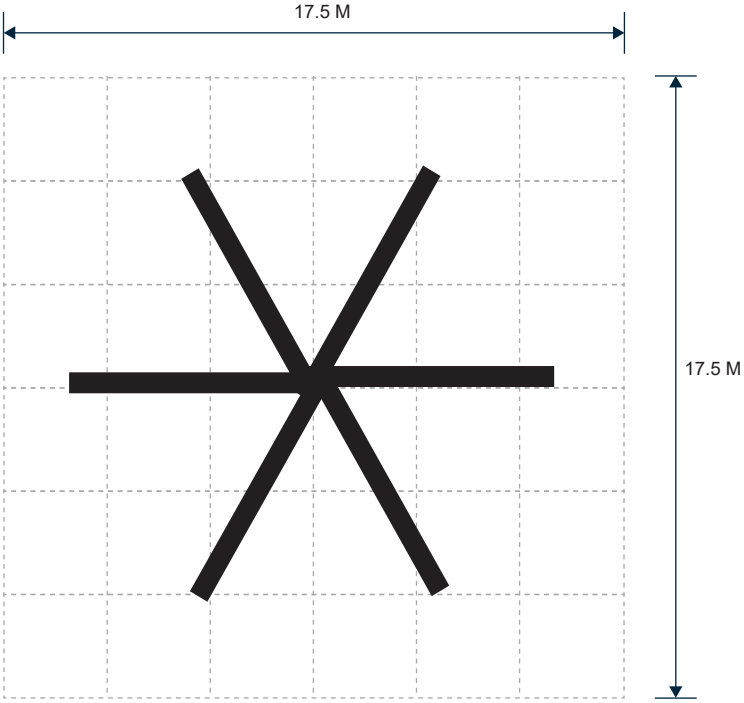

Fan Size 3.6 M

Installation Height from Floor to Ceiling Fan Blade

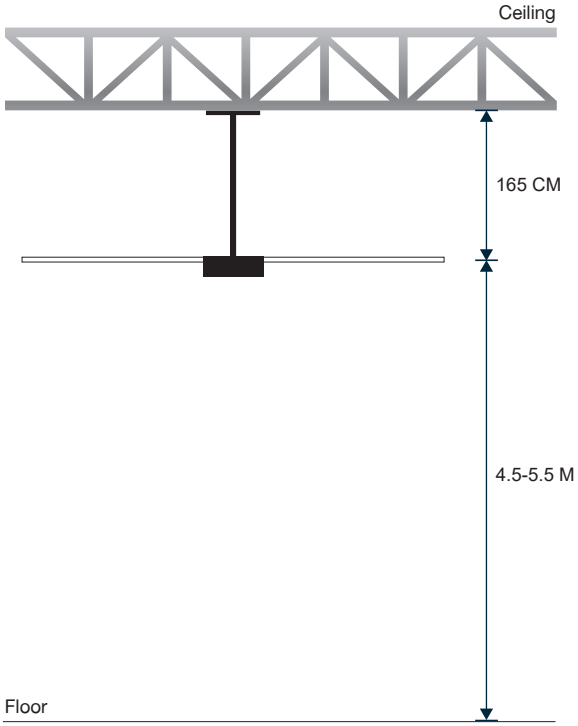

Air Circulation 3.6 M

Zone	Wide	Avg.Velocity
A	8 M	3.2 m/s
B	12 M	2.8 m/s
C	17.5 M	1.6 m/s

A B C

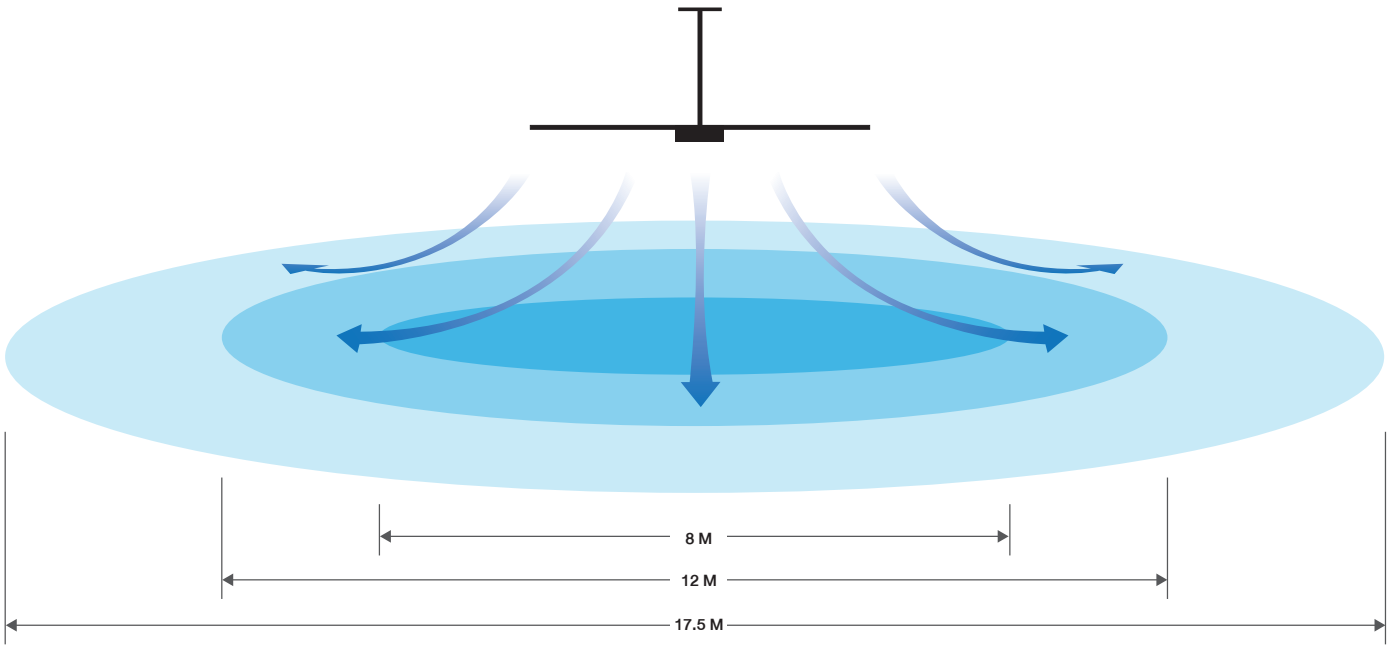

Model : Cosmo 3.6M HVLS DC Motor

Specification

1. Product Warranty :

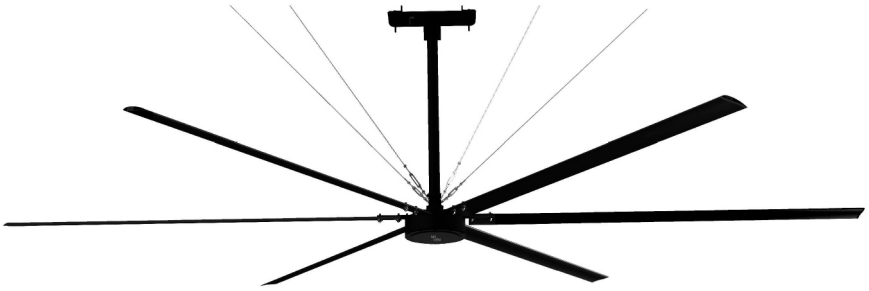

Control Box

2. Features :

Model	Motor Type	Body Material	Blades	Blades Material	Diameter	Control Mode	Net Weight Fan (kg)
COSMO 3.6 M	DC PMSM Motor	Aluminum Alloy	6	Aluminum Alloy	3.6 M	Control box	55.5

3. Fan Dimension :

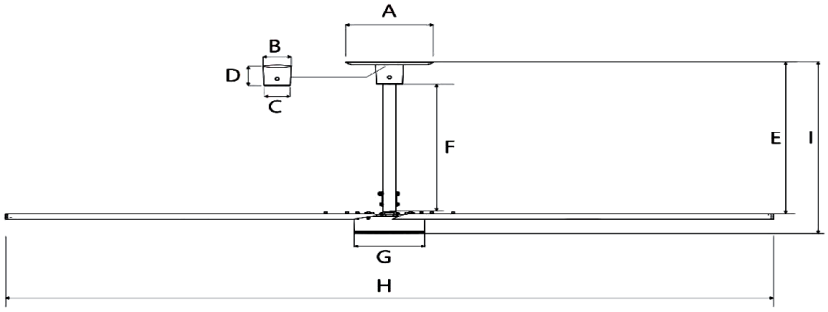

Unit : CM								
A	B	C	D	E	F	G	H	I
41	13.2	12.5	13	150	137	33	360	165

4. Power Consumption & Efficiency : (AC220V-50Hz)

Speed	Current (A)	Wattage (W)	Speed (RPM)	Air Flow (m^3/min)	Efficiency (m^3/min/W)	m/s	Effective Cover Area
1	0.07	15	21.5	459	30.6	0.2	300 M^2
2	0.09	19	28.5	864	45.5	0.6	
3	0.12	27	35	1467	54.32	0.8	
4	0.17	38	44	2017	53.07	1.1	
5	0.26	58	52	3300	56.90	1.8	
6	0.34	74	59	3667	49.55	2.0	
7	0.45	100	67	4217	42.17	2.3	
8	0.55	122	75	4583	37.57	2.5	
9	0.79	173	83	5133	29.67	2.8	
10	0.91	200	91	5500	27.50	3.0	

5.Weight/Size (Carton Box) :

Motor

Gross Weight (kg)	Net Weight (kg)	Size LxWxH (cm)	CU.FT	CU.M
42	38.2	56 x 53 x 37	3.88	0.11

Blade

Gross Weight (kg)	Net Weight (kg)	Size LxWxH (cm)	CU.FT	CU.M
12	10.7	168 x 17 x 20	2.02	0.06

Pipe box

Gross Weight (kg)	Net Weight (kg)	Size LxWxH (cm)	CU.FT	CU.M
6.8	6.6	152 x 7 x 7	0.26	0.01

Control Box 2 Years Warranty

Motor 10 Years Warranty

Model : Cosmo 4.3M HVLS DC Motor

Coverage Area 450 sqm

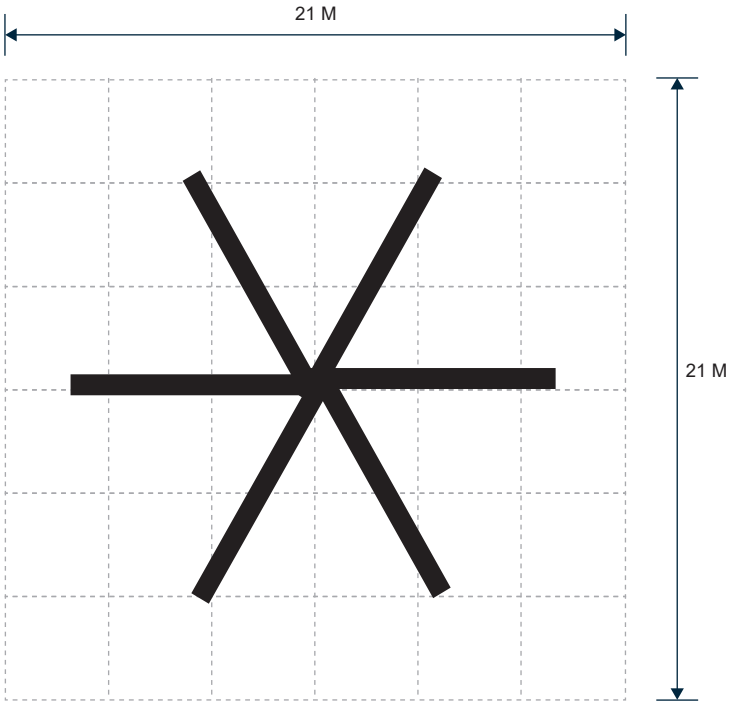

Fan Size 4.3 M

Installation Height from Floor to Ceiling Fan Blade

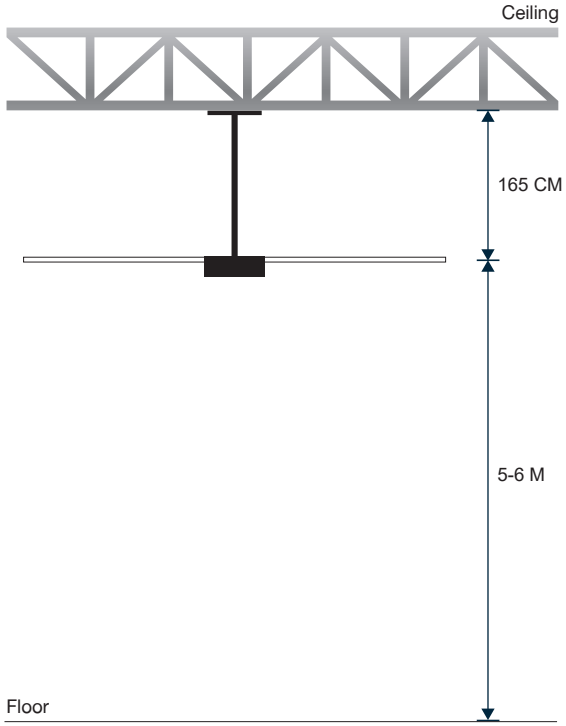

Air Circulation 4.3 M

Zone	Wide	Avg.Velocity
A	8 M	3 m/s
B	15 M	2.4 m/s
C	21 M	1.8 m/s

A B C

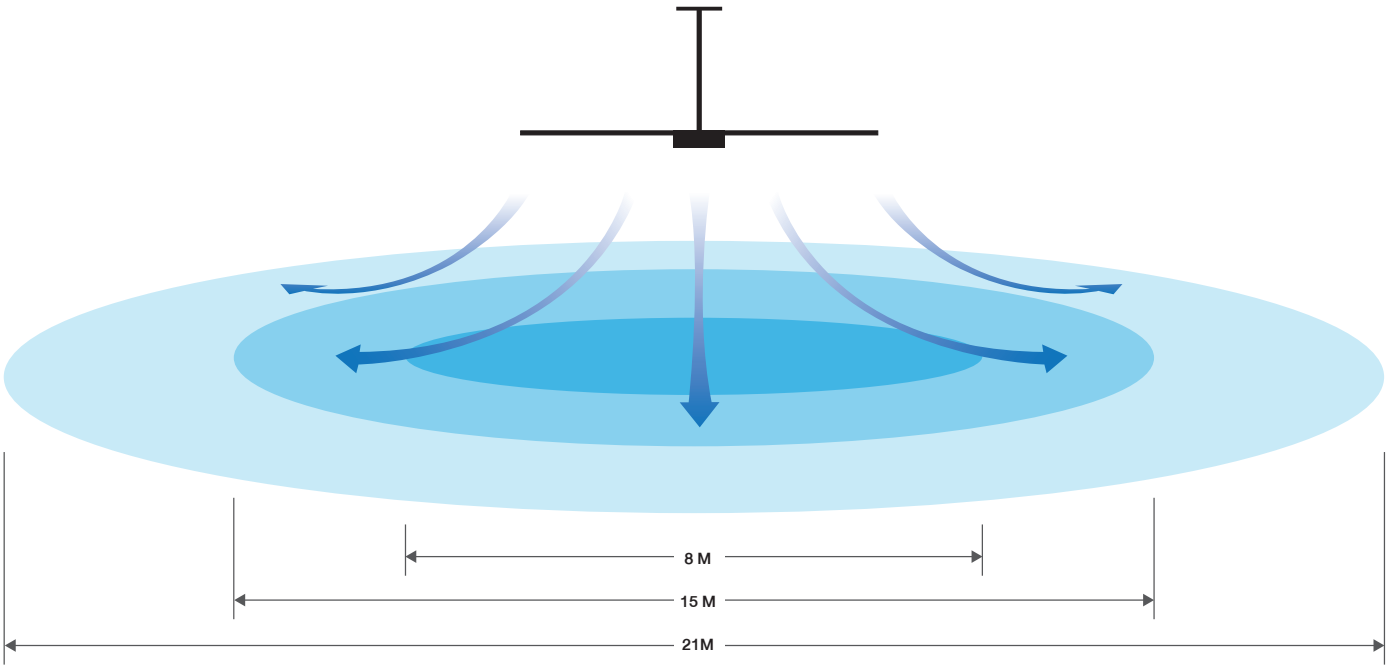

Model : Cosmo 4.3M HVLS DC Motor

Specification

1. Product Warranty :

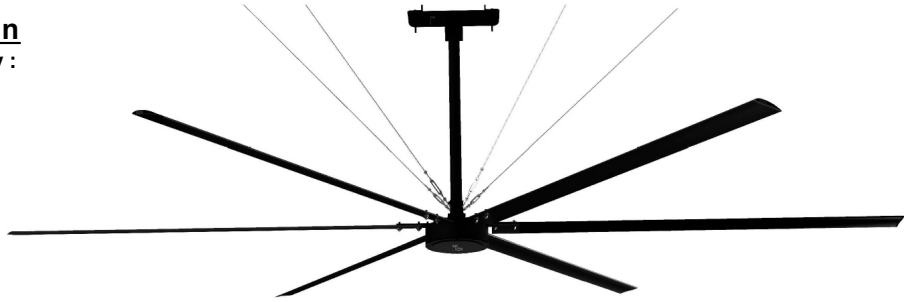

Control Box

2. Features :

Model	Motor Type	Body Material	Blades	Blades Material	Diameter	Control Mode	Net Weight Fan (kg)
Cosmo 4.3 M	DC PMSM Motor	Aluminum Alloy	6	Aluminum Alloy	4.3 M	Control box	57.4

3. Fan Dimension :

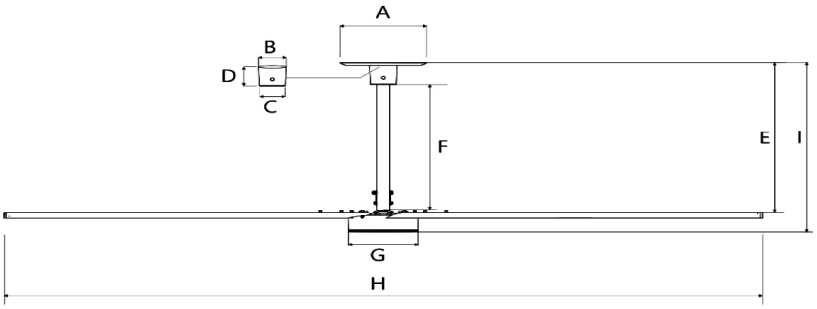

Unit : CM								
A	B	C	D	E	F	G	H	I
41	13.2	12.5	13	150	137	33	430	165

4. Power Consumption & Efficiency : (AC220V-50Hz)

Speed	Current (A)	Wattage (W)	Speed (RPM)	Air Flow (m^3 /min)	Efficiency (m^3 /min/W)	m/s	Effective Cover Area
1	0.07	16	20.8	548	34.25	0.20	450 M^2
2	0.10	21	26.6	954	45.43	0.40	
3	0.14	31	34.5	1172	37.80	0.50	
4	0.35	78	50	2813	36.80	1.20	
5	0.62	136	62	3047	22.40	1.30	
6	0.77	169	67	4688	27.74	2.00	
7	0.95	214	72	5156	24.09	2.20	
8	1.26	277	80	5859	21.15	2.50	
9	1.48	325	83	6563	20.19	2.80	
10	1.59	350	85	7500	21.43	3.20	

5.Weight/Size (Carton Box) :

Motor

Gross Weight (kg)	Net Weight (kg)	Size LxWxH (cm)	CU.FT	CU.M
42	38.2	56 x 53 x 37	3.88	0.11

Blade

Gross Weight (kg)	Net Weight (kg)	Size LxWxH (cm)	CU.FT	CU.M
14	12.6	202 x 17 x 20	2.43	0.07

Pipe box

Gross Weight (kg)	Net Weight (kg)	Size LxWxH (cm)	CU.FT	CU.M
6.8	6.6	152 x 7 x 2	0.26	0.01

Control Box 2 Years Warranty

Motor 10 Years Warranty

MR
. KEN

HEAD OFFICE : Brain Thai Enterprise Co., Ltd.
No. 4 Chaloemprakiat R.9 Soi 48 Yaek 11 Dokmai
Prawet Bangkok 10250 Thailand
T: (+66) 02 726 6505-6
F: (+66) 02 726 6707

SHOWROOM : CryStal Design Center
Building D Floor 2 No.214
1420/1 Praditmanutham Klongjun Bangkapi
Bangkok 10240 Thailand
T: (+66) 02 102 2618

SHOWROOM : Mega Bangna
Mega Home Level 1 No.1530
39 Moo 6 Bangna Trad Bangkaew Bangplee
Samutprakarn 10540 Thailand
T: (+66) 02 105 1807

SHOWROOM : Chiang Mai
Biz Point 2
34/5 Biz Point 2 Moo 1 Mae Hia
Chiangmai 50100 Thailand
T: (+66) 05 200 0595

www.mrken-fan.com